HONDA 600 Coupe WIRING DIAGRAM

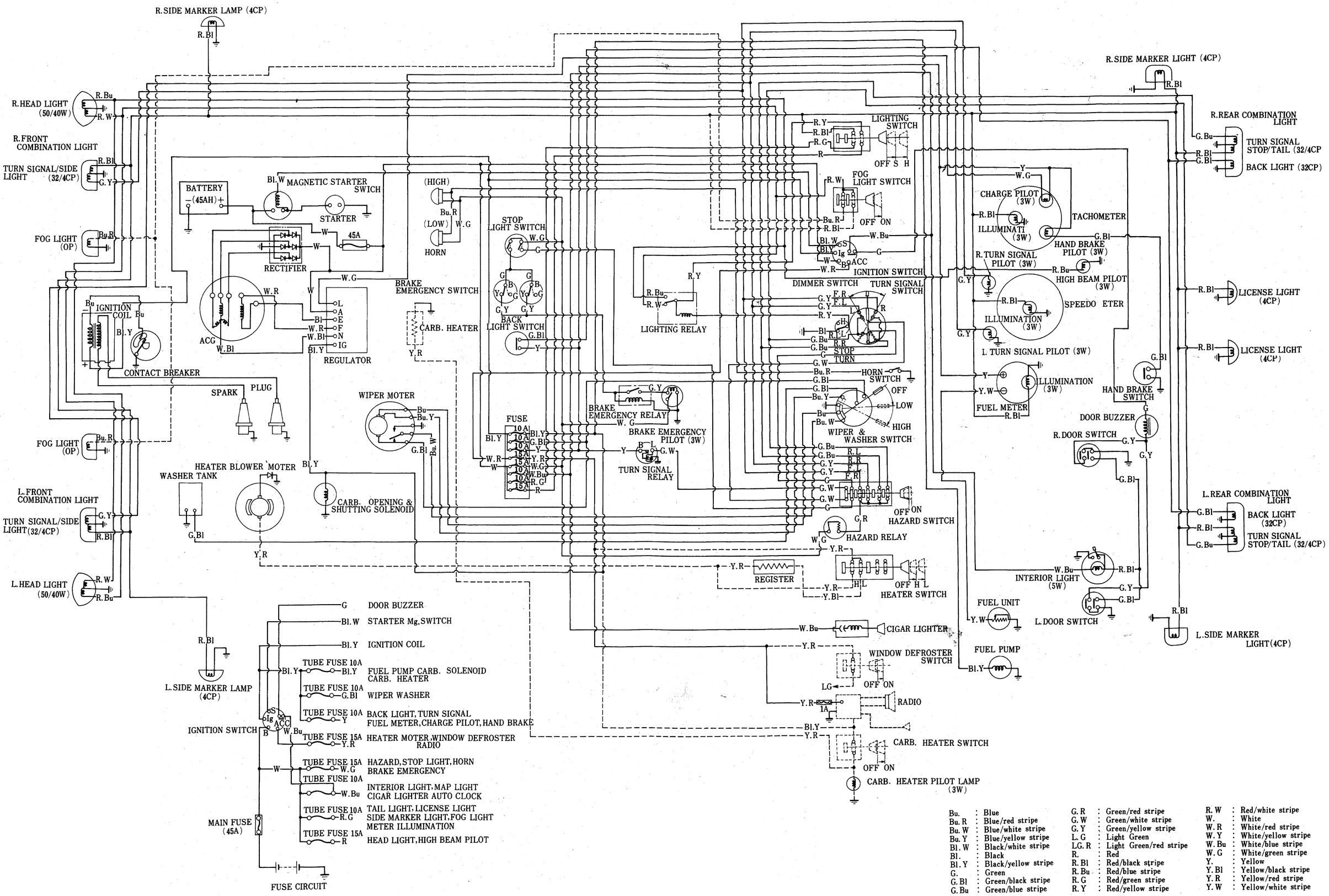

Bu.	: Blue	G.R	: Green/red stripe	R.W	: Red/white stripe
Bu.R	: Blue/red stripe	G.W	: Green/white stripe	W.	: White
Bu.W	: Blue/white stripe	G.Y	: Green/yellow stripe	W.R	: White/red stripe
Bu.Y	: Blue/yellow stripe	L.G	: Light Green	W.Y	: White/yellow stripe
Bl.W	: Black/white stripe	LG.R	: Light Green/red stripe	W.Bu	: White/blue stripe
Bl.	: Black	R.	: Red	W.G	: White/green stripe
Bl.Y	: Black/yellow stripe	R.Bl	: Red/black stripe	Y.	: Yellow
G.	: Green	R.Bu	: Red/blue stripe	Y.Bl	: Yellow/black stripe
G.Bl	: Green/black stripe	R.G	: Red/green stripe	Y.R	: Yellow/red stripe
G.Bu	: Green/blue stripe	R.Y	: Red/yellow stripe	Y.W	: Yellow/white stripe